Electrolux PROFESSIONAL

Spin Dryers
Vegetable Dryer, 10kg with resin basket

ITEM #

MODEL #

NAME #

SIS #

AIA #

601979 (ELX65F5)	Vegetable Dryer, 12 Kg with resin basket - 230-400V/3/50 Vegetable Dryer, 12 Kg with resin basket - 230-240V/1/50
601987 (ELX65F25)	VEG. DRYER-FLAT PANEL 10KG PLASTIC 230V

Short Form Specification

Item No.

Body and panels in stainless steel, lid in plastic material. Removable resin basket (65 litres). Flat and waterproof touch button control panel. Two cycles: "automatic" which alternates rotation with several sudden stops (for all vegetables); "manual" thanks to the adjustable timer up to 59 minutes (for delicate vegetables). Residual water is eliminated through an outlet pipe. Equipped with self-braking motor which stops the machine after the set drying time or if the lid is open during the cycle. IP55 and IP34 protection. V-ribbed belt drive. Basket rotation speed: 330 rpm. Load capacity: 10 kg, - 18 lettuce heads.

APPROVAL:

Main Features

- Spin drying automatic cycle with short drying time (1 to 2 minutes).
- "Automatic" cycle alternates rotation to several sudden stops, suitable for all vegetables.
- "Manual" cycle uses adjustable timer up to 59 minutes, to be used for delicate vegetables.
- Outlet pipe eliminates residual water.
- Timer with digital display and countdown.
- Safety device stops the machine when the cover is opened.
- Electrical braking system to stop basket rotation in a matter of seconds at the end of the cycle or when lid is opened.
- Heavy vegetables load per cycle: 10 Kg
- Light vegetables load per cycle: 18 units of lettuce heads.

Construction

- Stainless steel body and panels.
- Removable resin basket, 65 liters capacity.
- Basket rotates at approximately 330 rpm.

Included Accessories

- 1 of Additional plastic basket for 10 kg vegetable dryer PNC 653304

Optional Accessories

- Stainless steel basket with aluminium base for 10 kg vegetable dryer PNC 653303 ❑
- Additional plastic basket for 10 kg vegetable dryer PNC 653304 ❑

Spin Dryers
Vegetable Dryer, 10kg with resin basket

Front

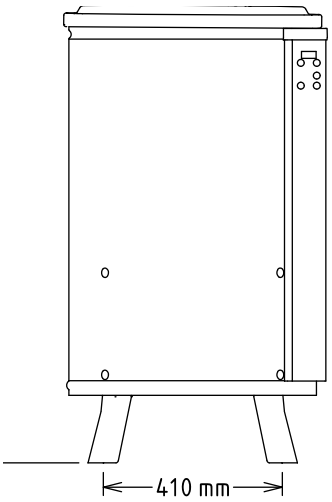

Side

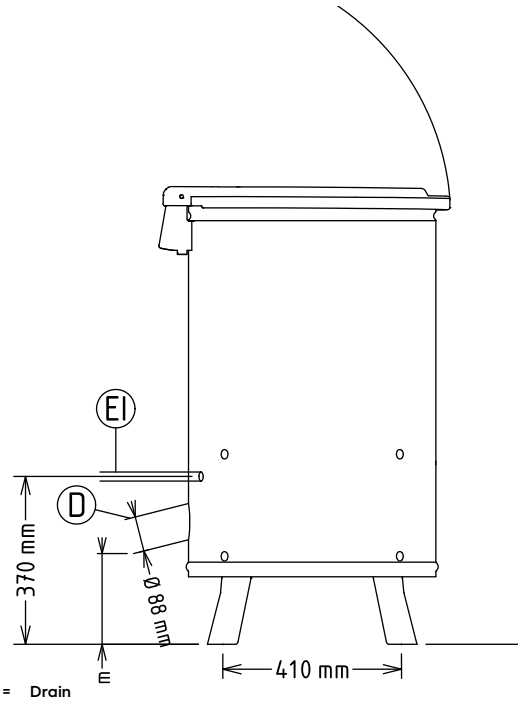

D = Drain
EI = Electrical inlet (power)

Top

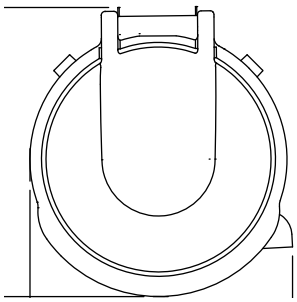

Electric

Supply voltage:	
601979 (ELX65F5)	200-240/380-415 V/3 ph/50 Hz
601987 (ELX65F25)	220-240 V/1N ph/50 Hz
Electrical power max.:	0.75 kW
Total Watts:	0.75 kW

Capacity:

Performance (up to):	ISO 9001; ISO 14001 kg/ Cycle

Key Information:

Well Capacity:	65 lt
Usable well capacity:	65 lt
Load per cycle - light vegetables:	18 UNITS OF LETTUCE
External dimensions, Width:	578 mm
External dimensions, Depth:	639 mm
External dimensions, Height:	1005 mm
Shipping weight:	
601979 (ELX65F5)	68 kg
601987 (ELX65F25)	71 kg

The company reserves the right to make modifications to the products without prior notice. All information correct at time of printing.

2024.10.06